Belinder Avenue Traffic Calming

Presented to: City of Fairway, Kansas

redcone
civil design group

Belinder Avenue Traffic Calming **1**

Project Description **3**
Current Conditions 3
Objectives 4

Design Options **5**
Traffic Calming Design One 5
Traffic Calming Design Two 7

Landscape Design **10**
Current Conditions 10
Design Approach 10

Recommendation **12**
Design Engineering Schedule 12

Appendix **13**
Design Standards: 13

Project Description

Current Conditions

Belinder Avenue in Fairway is a two-way, 0.55-mile residential street. Along the street, thirty-one homes and a single commercial building reside on the west side and the Mission Hills Country Club is located on the east side. The curbed street is twenty-two feet wide, on a straight alignment from Shawnee Mission Parkway to State Park Road. The posted speed limit is 25 MPH. The City of Fairway hired a Kansas City based national engineering consultant firm to put in twenty-four hour traffic counts over a one week period across Belinder Avenue in November 2017. The results showed the highest speeds of northbound traffic at the southern station at 36 MPH, slowing down 8 MPH further north along Belinder. Southbound traffic remains consistently above the speed limit along Belinder with the fastest point in the middle.

To address the speed, the City of Fairway closed part of the southern entrance to force a 90 degree turn onto Belinder Avenue. Two temporary speed humps were also added at the southern and northern end of the street. The study was conducted again in November 2018. Northbound traffic decreased by 100 cars per day and drastically decreased the southernmost speed by 10 MPH. Little effect was observed in the middle and northern stations. However, southbound traffic largely reduced as drivers found other routes to avoid speed humps. The speed slightly increased or had no effect. The middle count station for both north- and southbound shows the speed of drivers remained consistent. The drivers were not allowed space to speed up before needing to slow down for the next speed hump. A third speed hump was installed in the middle of Belinder Avenue and a third traffic study was conducted in September 2019. The addition of the new speed hump improved speeds in the middle of Belinder. For both north- and southbound traffic, the volume remains consistent with the previous count. Southbound traffic enters Belinder above the speed limit and stays consistently fast. When going down the hill on the south side, the speed increases before the last speed hump. See Belinder Avenue's profile in Figure 1.

Figure 1. Belinder Avenue Profile

Objectives

Redcone Design was tasked with presenting a street calming design that would:

- reduce the cross-through traffic
- slow vehicles to the current speed limit of 25 miles per hour on Belinder Avenue
- create a permanent design for the south island adjacent State Park Road.

The City indicated a target budget of $50,000 for the total project and a desire for low maintenance costs.

Design Options

Traffic Calming Design One

Design One for the Fairway Traffic Calming Project is not a documented traffic calming measure, but was created through brainstorming by the Redcone Design team. The measure consists of removing all current temporary speed humps and placing in a longitudinal speed hump spanning the entire length of Belinder Avenue from Shawnee Mission Parkway to the island at State Park Road. The speed hump would span approximately 2900 foot of roadway and have dimensions of four feet wide by a rounded hump with the apex at four inches, shown in Figures 2 and 3. The longitudinal speed hump would create side friction causing drivers to slow down due to the narrowed driving lanes. The hump would be tall enough to make drivers aware it is present, but driving over it to access the road and driveways would not be an unpleasant experience for residents and drivers alike.

An alternative to a longitudinal speed hump was evaluated: an inverted speed hump with rumble strips. However, the alternative was discarded due to the noise the rumble strips would produce along the street.

The entire length of the hump would be painted to notify drivers. The cost of an average fourteen foot wide speed hump costs approximately $2,500. Considering the longitudinal speed hump would be continuous and not require as much asphalt, estimates would vary widely. An estimated cost range between $20,000 - $25,000. The cost would depend on the mobilization of workers and equipment costs. To paint the longitudinal speed hump, costing roughly $29/LF, the total is dependent on markings and spacing. To be cost effective, markings could be made every ten feet for about $8,500, being conservative. The cost puts the road design total at $33,500. The painting cost creates limitations on the budget for the island expansion. The painting would likely have to occur yearly, but costs are based on a one year projection. The construction of the longitudinal speed hump would be constructed during road pavement months (May- November) with about a week or two of construction.

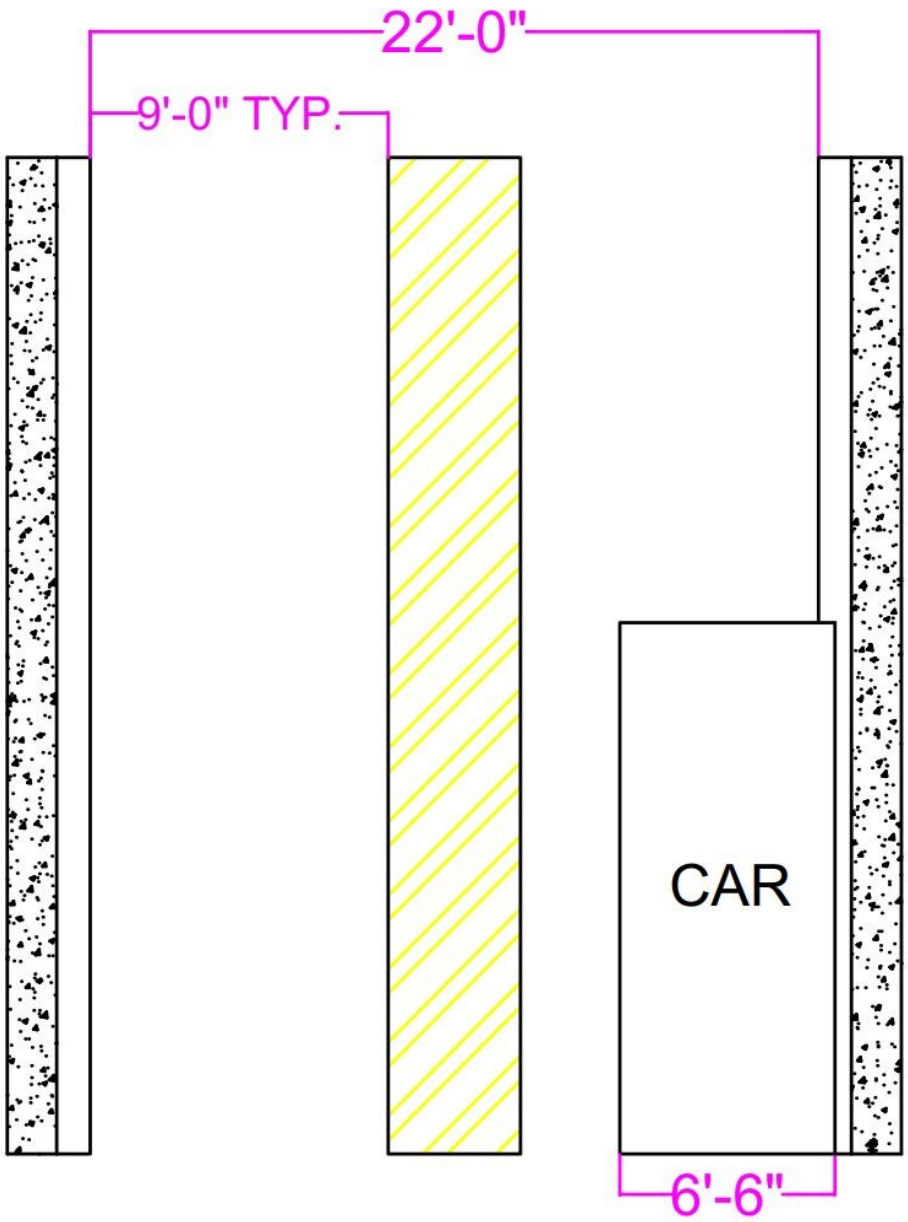

Figure 2. Longitudinal Speed Hump

Figure 3. Cross Section for

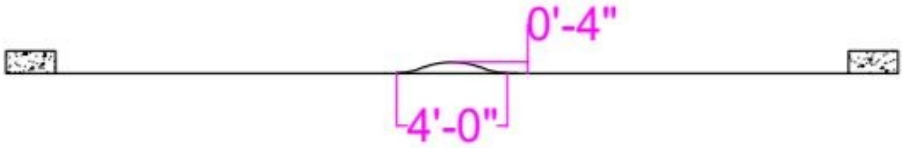

Longitudinal Speed Hump

Traffic Calming Design Two

Design Two for the Fairway Traffic Calming Project would be a similar design to the current conditions on Belinder Avenue. The removal of the temporary speed humps will allow for replacement at or near the current locations with permanent speed humps. An additional speed hump will be placed at an effective location to slow down traffic along Belinder Avenue between the relocated southern speed humps. A total of four permanent speed humps with dimensions of twenty feet long and five feet wide with a rounded apex of four inches, see Figure 5. All four speed humps will be placed adjacent to current fire hydrants to minimize loss of street parking for residents, see Figure 4. Signs will be placed before each hump to warn drivers.

In addition to the permanent speed humps, a neck-down will be painted at the intersection of Belinder Avenue and Shawnee Mission Parkway, shown in Figure 7. The estimated cost to paint the neck-down is approximately $1,000, based on the eight foot by three foot area each neck-down would cover.

The second design option is expected to:

- reduce speeds along Belinder Avenue with similar results as seen with temporary speed humps
- create a quieter environment than the temporary speed humps
- remain in place during the winter months, whereas current temporary speed humps must be removed for snow removal
- slow southbound traffic going down hill and northbound traffic entering Belinder Avenue from State Park Road
- reduce incoming speeds from southbound traffic from Shawnee Mission Parkway

A conservative cost estimate of a speed hump is $4,000 each. Added signage for speed humps is an additional $500 each. Painting costs approximately $27 per linear foot. The cost of speed humps, signage and painting will total $16,000, $2,000 and $2,200, respectively. Design Two will cost $21,200 for the neck-down, speed humps, signage and painting in total. The island expansion will be budgeted $28,800 to complete.

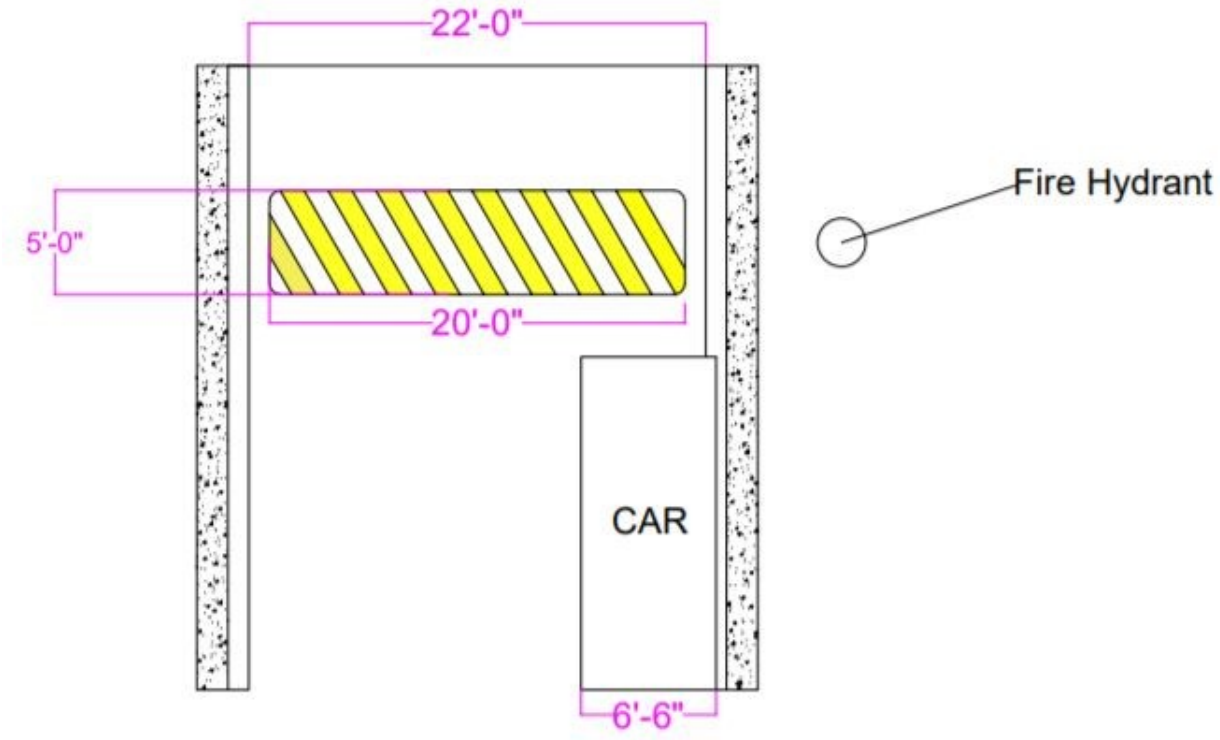

Figure 4. Permanent Speed Hump

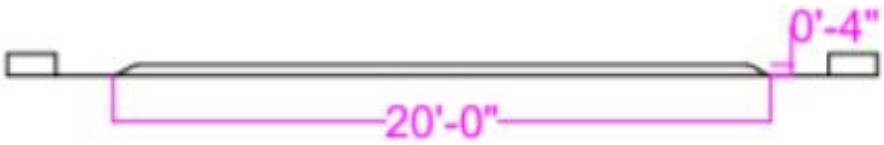

Figure 5. Cross Section for Permanent Speed Hump

Figure 6. Location of Speed Humps

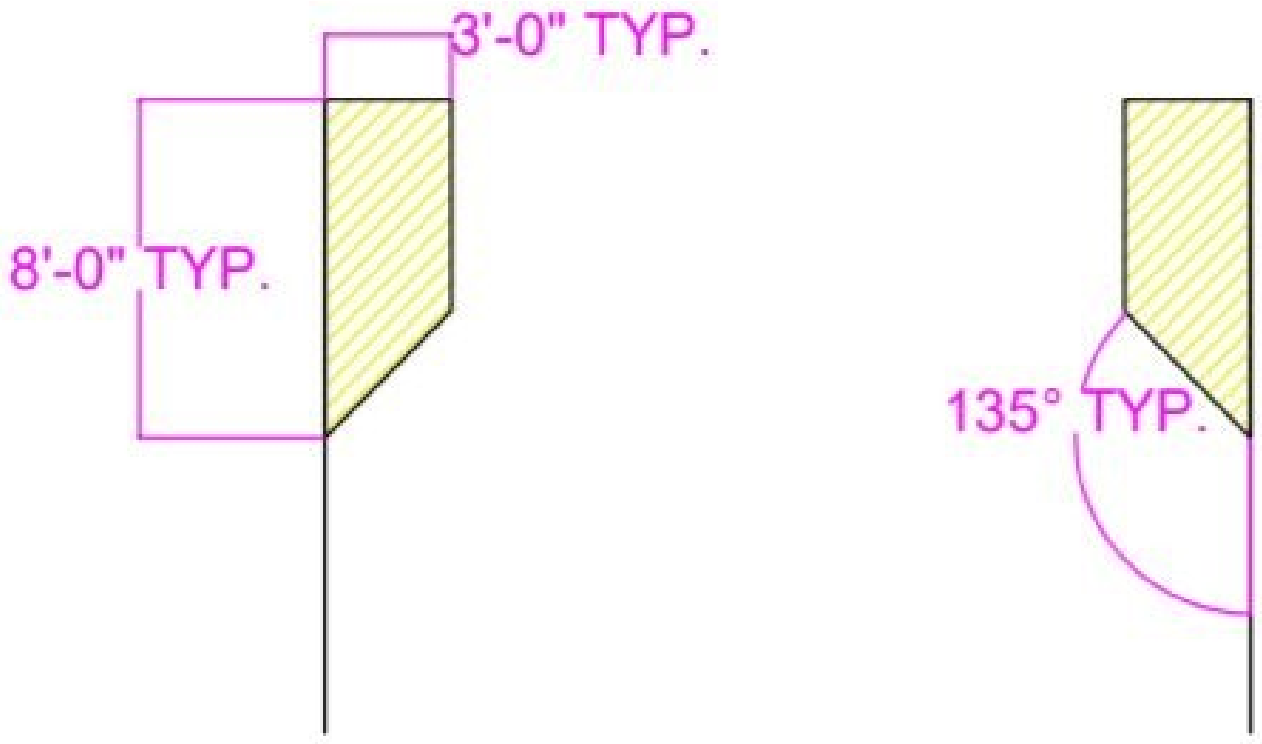

Figure 7. Painted Neck-Down

Landscape Design

Current Conditions

The main focus for the landscape design is the island at the Southern end of Belinder Avenue pictured in Figure 8 . Currently, temporary bollards block off the road going from State Park Road onto Belinder Avenue. The City of Fairway has requested the temporary measure to be permanent.

Figure 8. Island Current Conditions

Design Approach

To fulfill the City's request, Redcone Design has developed a preliminary design for the island, shown in Figure 9. For the safety and convenience of pedestrians in the area, a four and one half foot wide path will remain on the east side of the island. The path will also allow stormwater to run off Belinder Avenue to prevent pooling at the curve. The plan for the new green space is

to be covered with grass to reduce the maintenance required and overall cost. The estimated cost to extend the island is $2,500. This estimate includes removal of asphalt, curb, and gutter. In addition, the cost of pouring new curb and gutter and landscaping is included.

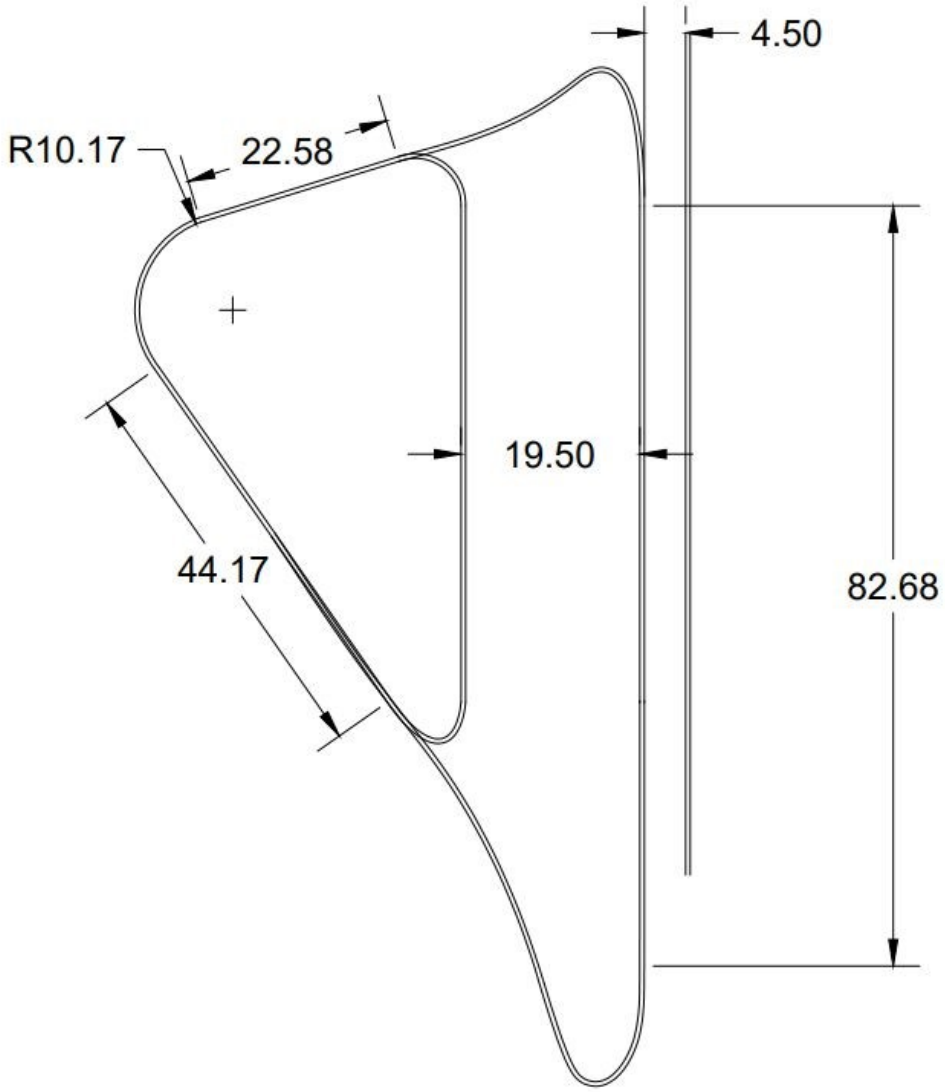

Figure 9. Adjusted Island Design

Recommendation

Redcone Design recommends Design Two based on cost effectiveness and similarities to currently successful measures on Belinder Avenue. The south island design will be added along with Design Two. The total estimated cost of the project is $31,300.

Design Engineering Schedule

	2020				
Milestones	Jan.	Feb.	Mar.	Apr.	May
Notice to Proceed					
Public Interaction					
30% Plan Development					
30% Plans Complete					

redcone
civil design group

Appendix

Landscape Design Cost Estimate

	Quantity	Unit	Daily Output	Labor Hours	Bare Total	Total Cost
Remove Asphalt	60	SY	420	0.095	6.4	$384.00
Curb & Gutter	170	LF	500	0.096	7.44	$1,264.80
Landscaping	60	SY	1300	0.009	7.86	$471.60

GRAND TOTAL	$2,120.40
GRAND TOTAL + 20% CONTINGENCY	$2,544.48

*cost generated using RSMeans line items.

Design One Cost Estimate

Longitudinal Speed Hump				
Length (ft.)	Width (ft.)	Height (in.)	Total Cost	Cost/LF
2900	4	4	$25,000.00	$ 6.47

Road Painting		
LF	Cost/LF	Total Cost
290	$ 27.00	$ 7,830.00

Total Cost
$ 32,830.00

Total Cost for Design One: $32,830

Design Two Cost Estimate

Average Permanent Speed Hump				
Length (ft.)	Width (ft.)	Height (in.)	Total Cost	Cost/CF
14	5	4	$ 4,000.00	$171.43

Permanent Speed Hump		
Humps	Cost/Hump	Total Cost
4	$4,000.00	$16,000.00

Speed Hump Signs		
Signs	Cost/Sign	Total Cost
8	$ 250.00	$ 2,000.00

Road Painting		
LF	Cost/LF	Total Cost
80	$ 27.00	$ 2,160.00
24	$ 27.00	$ 648.00

Total Cost
$ 20,808.00

Total Cost for Design Two: $20,808

Sources for Pricing:
FHWA Traffic Calming Documents
ITE Traffic Calming Fact Sheets

redcone
civil design group